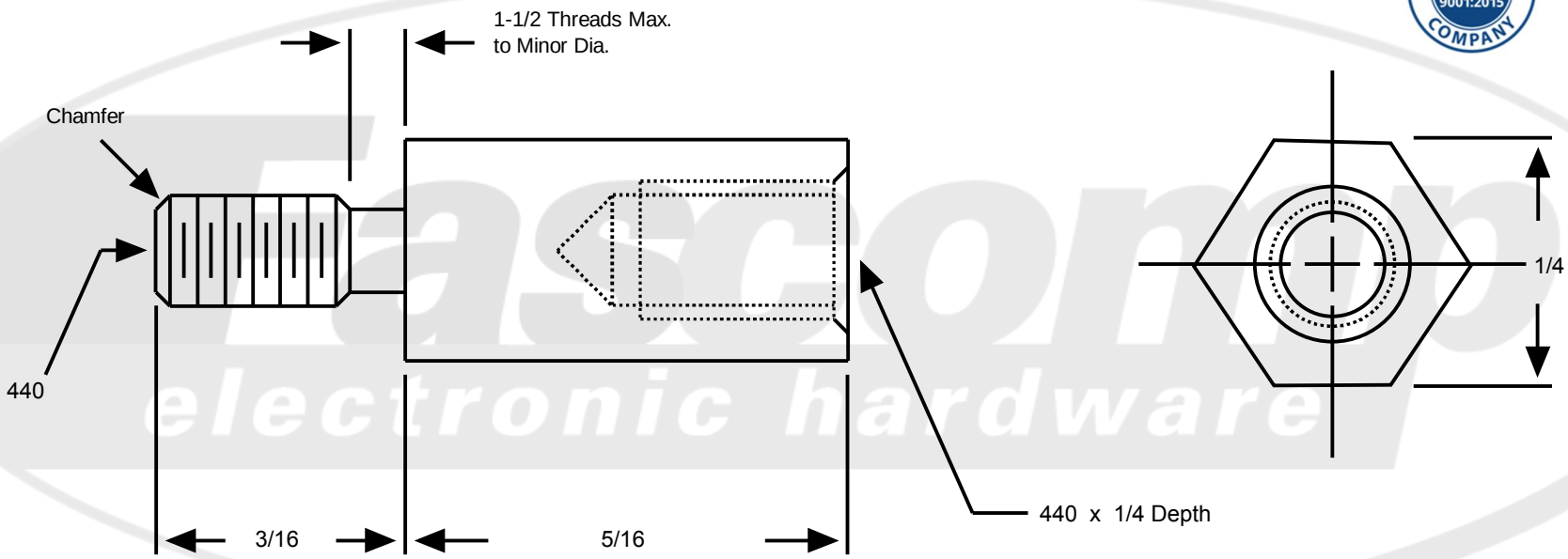

*Short lengths tapped to maximum depth

*Short Lengths Minimum Internal Thread Depth									
Body Lengths in Decimal									
Thread	**.187**	**.250**	**.312**	**.375**	**.437**	**.500**	**.562**	**.625**	**.750**
2-56	.095	.150							
4-40	.100	.150	.200						
6-32	.090	.130	.190	.250	.300				
8-32	.090	.130	.190	.250	.300	.355			
10-32	.090	.125	.190	.250	.300	.355	.434	.475	
12-24	.070	.110	.160	.195	.250	.335	.424	.465	
25-20	.060	.090	.135	.160	.250	.310	.365	.430	.553
31-18	.060	.080	.125	.150	.220	.280	.335	.400	.475

All base materials are RoHS compliant

Drawing not to scale	Title: Hex Male-Female Standoff
Break all sharp edges on outside diameters	Part Number: FC4531-440-SS
All base materials are RoHS compliant	Material: Stainless Steel
Tolerances (Unless Specified) Decimal .XXX ± .005 .XX ± .010 Fraction ± .005 Angle ± 3° Millimeters ± .13 Nylon ± .010 Metric Nylon ± .25	Finish: Plain

"The Good Guys"
Fascomp electronic hardware
1235 Tradeport Drive, Orlando, FL 32824
Tel: 407-226-2112 Fax: 407-226-3370
www.Fascomp.com