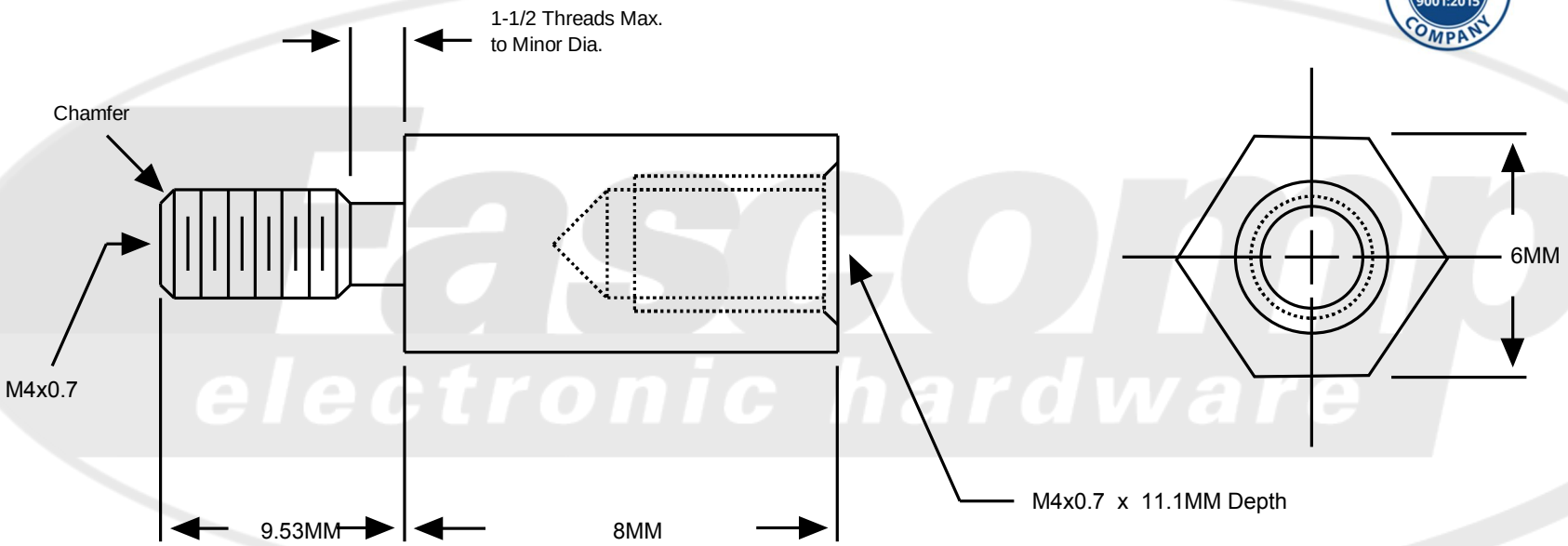


*Short lengths tapped to maximum depth

| *Short Lengths Minimum Internal Thread Depth<br>Body Length in Millimeters | | | | | | | | | | | | | | |
|---|---|---|---|---|---|---|---|---|---|---|---|---|---|---|
| **Thread** | **5** | **6** | **7** | **8** | **9** | **10** | **11** | **12** | **13** | **14** | **15** | **16** | **17** | **18** |
| **M2.5x0.45** | 2.5 | 3.5 | 4.5 | | | | | | | | | | | |
| **M3x0.5** | 2.6 | 3.6 | 4.6 | 5.6 | | | | | | | | | | |
| **M3.5x0.6** | 1.7 | 2.7 | 3.7 | 4.7 | 5.7 | 6.7 | 7.7 | 8.7 | | | | | | |
| **M4x0.7** | 1.3 | 2.3 | 3.3 | 4.3 | 5.3 | 6.3 | 7.3 | 8.3 | 9.3 | 10.3 | | | | |
| **M5x0.8** | 1.2 | 2.2 | 3.2 | 4.2 | 5.2 | 6.2 | 7.2 | 8.2 | 9.2 | 10.2 | 11.2 | 12.2 | | |
| **M6x1.0** | 1.1 | 1.2 | 1.4 | 2.4 | 3.4 | 4.4 | 5.4 | 6.4 | 7.4 | 8.4 | 9.4 | 10.4 | 11.4 | 12.4 |
| **M8x1.25** | 1.0 | 1.0 | 1.3 | 1.8 | 2.8 | 3.8 | 4.8 | 5.8 | 6.8 | 7.8 | 8.8 | 9.8 | 10.8 | 11.8 |

All base materials are RoHS compliant

| | |
|---|---|
| Drawing not to scale | Title: Metric Hex Male-Female Standoff |
| Break all sharp edges on outside diameters | Part Number: FM2143-4007-A |
| All base materials are RoHS compliant | Material: Aluminum |
| Tolerances<br>(Unless Specified)<br>Decimal .XXX ± .005<br>.XX ± .010<br>Fraction ± .005<br>Angle ± 3°<br>Millimeters ± .13<br>Nylon ± .010<br>Metric Nylon ± .25 | Finish: Plain |

"The Good Guys"
Fascomp electronic hardware
1235 Tradeport Drive, Orlando, FL 32824
Tel: 407-226-2112 Fax: 407-226-3370
www.Fascomp.com