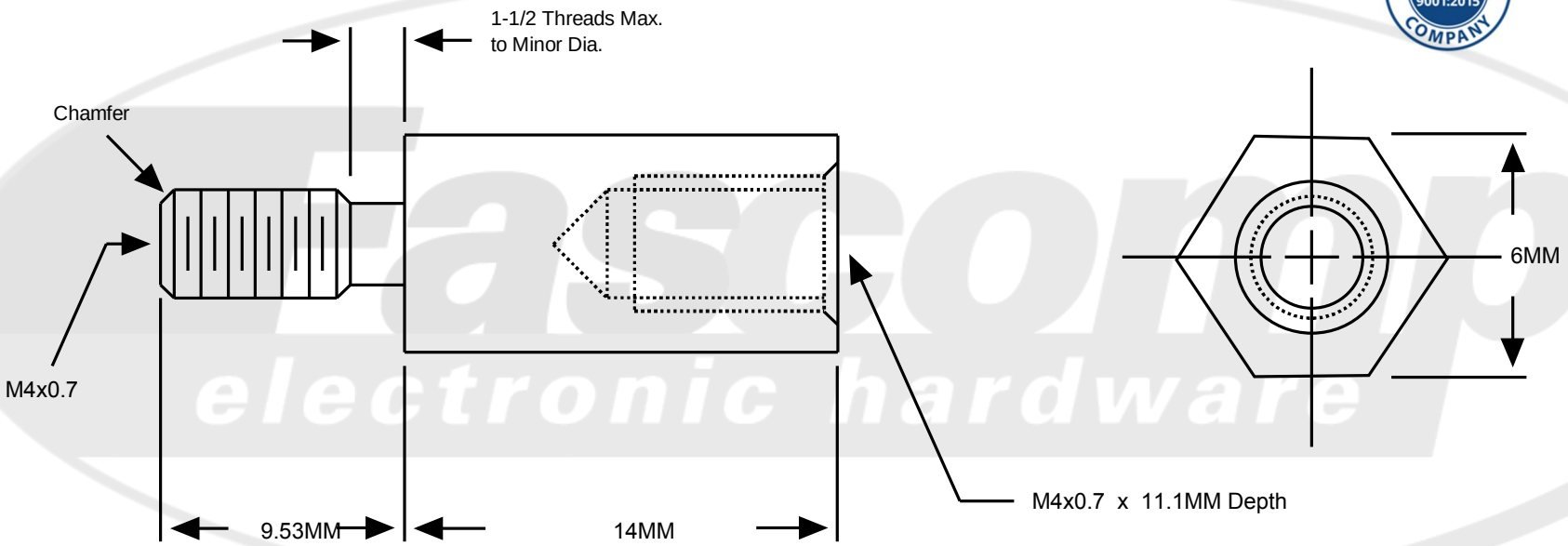

*Short lengths tapped to maximum depth

*Short Lengths Minimum Internal Thread Depth Body Length in Millimeters														
Thread	**5**	**6**	**7**	**8**	**9**	**10**	**11**	**12**	**13**	**14**	**15**	**16**	**17**	**18**
M2.5x0.45	2.5	3.5	4.5											
M3x0.5	2.6	3.6	4.6	5.6										
M3.5x0.6	1.7	2.7	3.7	4.7	5.7	6.7	7.7	8.7						
M4x0.7	1.3	2.3	3.3	4.3	5.3	6.3	7.3	8.3	9.3	10.3				
M5x0.8	1.2	2.2	3.2	4.2	5.2	6.2	7.2	8.2	9.2	10.2	11.2	12.2		
M6x1.0	1.1	1.2	1.4	2.4	3.4	4.4	5.4	6.4	7.4	8.4	9.4	10.4	11.4	12.4
M8x1.25	1.0	1.0	1.3	1.8	2.8	3.8	4.8	5.8	6.8	7.8	8.8	9.8	10.8	11.8

All base materials are RoHS compliant

Drawing not to scale	Title: Metric Hex Male-Female Standoff
Break all sharp edges on outside diameters	Part Number: FM2149-4007-A
All base materials are RoHS compliant	Material: Aluminum
Tolerances (Unless Specified) Decimal .XXX ± .005 .XX ± .010 Fraction ± .005 Angle ± 3° Millimeters ± .13 Nylon ± .010 Metric Nylon ± .25	Finish: Plain

"The Good Guys"
Fascomp electronic hardware
1235 Tradeport Drive, Orlando, FL 32824
Tel: 407-226-2112 Fax: 407-226-3370
www.Fascomp.com